DURACLUTCH INSTALLATION
15-630 631 632 K-DC- RZR 1000 MY14-15 XP AEBS RXS

SVI, LLC 24NOV2026 REV 6

KIT PART #: 15-630 631 632
MODEL: K-DC-RZR 1000 XP AEBS RXS
DESCRIPTION: MY2014-2015 RZR XP 1000 ALL MODELS

KIT CONTENTS:

1. 10-288 ASM-DCPRIM 26G EBS1000 RXS **(15-630)**
   10-367 ASM-DCPRIM 22G EBS1000 RXS **(15-631)**
   10-368 ASM-DCPRIM 20G EBS1000 RXS **(15-632)**
2. 25-146 SHOULDER WASHER
3. 75-047 SCREW-CLUTCH
4. 99-024 TOOL-12MM BIT SOCKET 3/8 DRIVE (SUBSTITUTE 99-007 TOOL-12MM BIT SOCKET 1/2 DRIVE)
5. 10-371 SECONDARY CLUTCH 9.5 PREM ROLL
6. 75-053 SCR-HXFL-M10X1.25X100 10.9 ZOD
7. 90-056 WASHER-0.406X1.25X0.125 BELLE-Y
8. 90-060 QTY 3 SHIM 0.922X1.015X0.036
9. 90-061 QTY 1 SHIM 0.922X1.015X0.060
10. 99-036 VIBRA-TITE 122 1.8ML THREADLOCKER
11. 35-063 BELT
12. 30-091 TOOL-BELT INSTALL
13. 97-066 DECAL-DC CLUTCH HOUSING DASH 35-063
14. 98-066 DURACLUTCH WARRANTY R SERIES
15. 98-143 INSTRUCTION-INSTALLATION 15-622 630 631 632 (THESE INSTRUCTIONS)

DURACLUTCH INSTALLATION

1. If applicable, (varies by model) loosen clamp on hose connected to clutch cover and move hose out of the way. Remove the clutch housing cover and the secondary clutch.

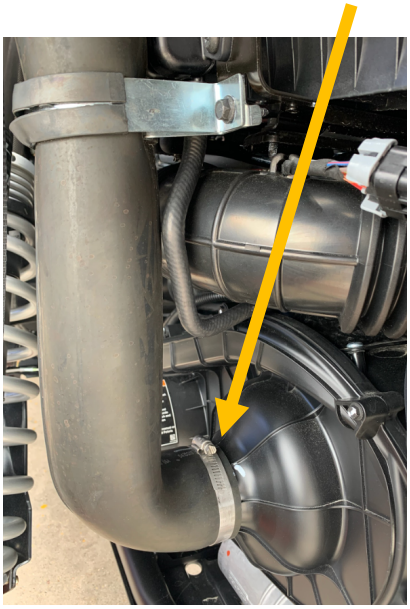

2. Place one 90-061 shim and one 90-060 provided with kit on the transmission shaft up against the spline shoulder.



3. Install the DURACLUTCH Secondary. Use the Secondary bolt and Belleville washer provided with kit. Place a drop of BLUE Vibra-Tite provided with kit on the secondary bolt. Tighten the Secondary bolt to 45 ft-lbs.

How Belleville washer is installed on secondary bolt

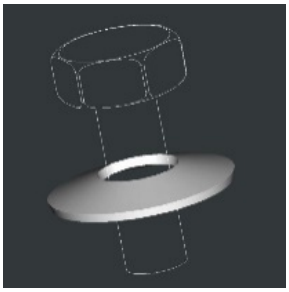

4. Remove Primary clutch bolt. Remove the Primary clutch with puller SVI 99-012 (Sold Separately). Greasing the end of the puller slightly will aid in removal. Do not get grease on any clutch components.



5. Clean the engine tapered shaft and Primary clutch bore with alcohol or degreaser. Do not lubricate.
6. Slip the belt into the Secondary so you can read the part number on the belt and using Belt Install Tool open secondary so belt will seat down into clutch. Sometimes a screwdriver is needed to assist lowering into clutch.



7. Slide belt into primary clutch, then install on post.





8. Install DURACLUTCH Primary with hardware provided as shown below. **VERY IMPORTANT -Torque bolt to 60 ft-lbs. <u>Over tightening will not allow clutch to operate properly and cause damage and failure of the clutch.</u>** SVI PN 99-034 Torque Tool (Sold Separately) shown below to hold the primary clutch when torquing the primary screw.

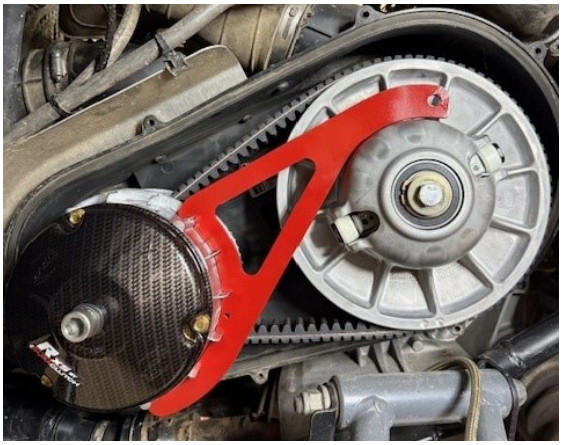

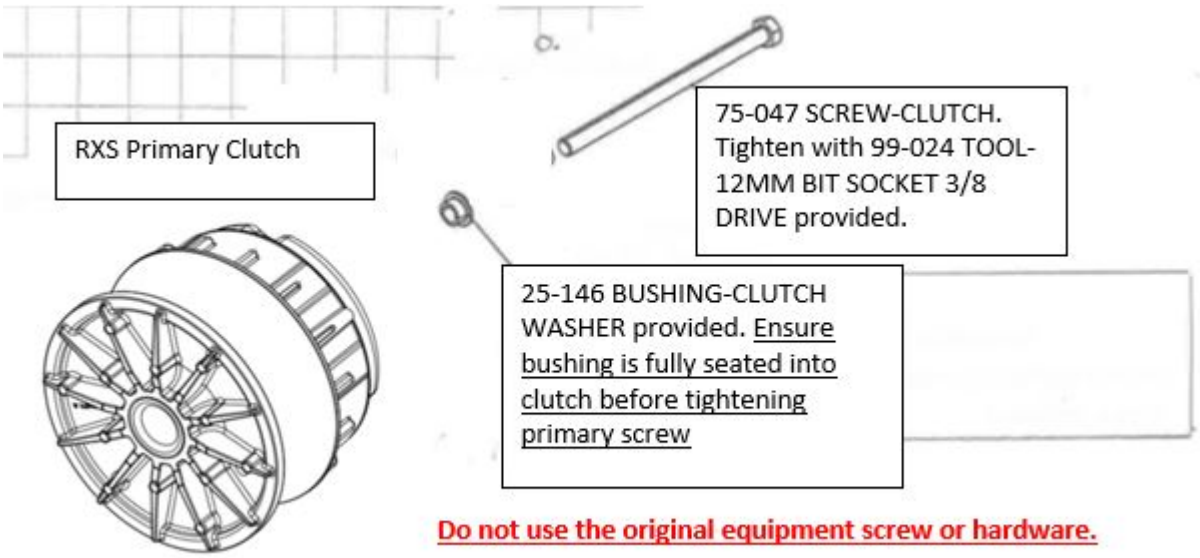

9. Set belt tension. Place transmission in Park and make sure machine is turned off. Rotate secondary by hand to seat belt in secondary clutch until belt tension is tight.

10. Once belt tension is set, start machine and verify that the secondary clutch has slight to no rotation at idle. (If slight rotation this will go away after belt break-in) If slight to no rotation, proceed to step 12. If the secondary is spinning fast, proceed to step 11.

11. If the secondary rotates fast, turn machine off and check to see where the belt is riding in between the primary sheaves. The ideal belt location should be centered with a small gap on each side between the sheaves, a cell phone picture may help see where belt is riding. Follow steps a. or b. to determine the next action.
    a. If belt is up against fixed sheave (inward), remove belt and secondary screw & secondary and add one shim washer included in kit onto shaft. Install secondary, secondary screw and belt, start machine to reset alignment. If the secondary still rotates fast and rides against fixed sheave, add another shim washer. Repeat until there is slight to no rotation, remember to blue Vibra-tite secondary screw when alignment is complete and torque to spec, proceed to step 12.
    b. If belt is up against moveable sheave (outward), remove belt, secondary screw & secondary and remove one shim washer. Install secondary, secondary screw and belt, start machine to reset alignment. If the secondary still rotates fast and rides against the movable sheave, remove another shim washer. Repeat until there is slight to no rotation, remember to blue Vibra-tite secondary screw when alignment is complete and torque to spec, proceed to step 12.

To watch a video on R-Series alignment go to our YouTube channel
https://www.youtube.com/watch?v=auhmTrhk7Oo&t=17s

12. Install outer clutch housing. Ensure seal is good or replace with DURACLUTCH seal part # 35-045.
    Note: The clutch cover screws are hi-lo screws designed for plastic. They can be used over and over in the same hole but must not be over-torqued. Attach hose to clutch cover and tighten clamp.

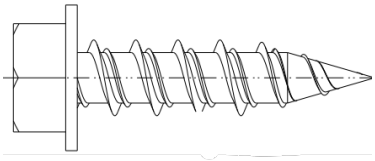

    Torque spec: 50 in-lbs (4 ft-lbs). This is like a screwdriver torque. Use a hand wrench or a clutch screw gun at a very low setting.

13. Recommended Belt Break-In Procedure

Do NOT immediately run wide open throttle. Do NOT immediately pull heavy loads.

Drive the vehicle in a "normal" operating mode for 10-15 minutes and let the vehicle cool down to ambient temperatures. A few normal drive cycles, heating the belt up and cooling it down will help season the belt and remove any mold release from the belt manufacturing process. The clutch system will be ready for full function after about 10 miles of running.

NOTE: If the transmission still shifts hard after break-in there are likely issues other than drag in the clutches. See your dealer or call DURACLUTCH service (218-967-8205).

14. DECALS

Apply two decals as shown – one on the clutch housing and one on the dash. Clean surface with alcohol or similar solvent. Decal applications are important to alert service technicians that the standard Polaris clutches have been replaced.





To watch an installation video, go to www.duraclutch.com or our YouTube channel.
https://www.youtube.com/@Duraclutch/videos

DURACLUTCH R-SERIES WARRANTY

The DURACLUTCH warranty is separate from the Polaris vehicle warranty. SVI, LLC provides a limited warranty on the DURACLUTCH for defects in materials and workmanship for general consumer use. This includes the primary, secondary and belt. It does not cover claims of defective design. SVI, LLC is responsible for DURACLUTCH warranty.

The warranty term of coverage is as follows:

- Belt: One (1) Year.
- Primary and Secondary: One (1) Year.

The term begins on the date of purchase by the original purchaser. This warranty is transferable to a subsequent owner but does not extend the original term of the warranty.

This limited warranty does not cover acts of God, accidental damage, normal wear and tear, abuse, or improper handling.

The following conditions void the warranty:

1. Improper installation.
2. Installation of tires with a diameter greater than the O.E.M. tire diameter without compensating gear reduction such as portals, transmission gearing or both.
3. Not performing prescribed routine maintenance by removing the clutch housing every 500 miles to 1) blow the dust out of the primary and secondary clutch, 2) examine the belt, and other components for abnormal wear indicating a problem needing corrective action.
4. Not insuring adequate and continuous cooling air through the clutch housing. This includes intake vents and outlets plugged with snow, dust, or debris. SVI offers an Engine and Clutch Intake Kit for certain models that prevent vehicle intakes from plugging with snow and dust.
5. Use of an improper belt. *Appropriate DURACLUTCH belt must be used*.
6. Modifying calibration, such as primary spring and roller, or secondary spring and cam.
7. Water in the clutch housing. Water damage or rust on clutches, this includes if you have gotten clutches wet while riding, washing the machine or wet when clutches are removed.
8. Abnormal dust conditions such as abrasive dust or running in very dusty conditions without filters or particle separators.
9. Driver abuse such as continuing to operate in HI gear when LO gear is the proper gear.

This warranty replaces all previous warranties expressed or implied.

www.duraclutch.com SVI Sales, 5112 Northstar Lane Suite 2, Nisswa, MN 56468 USA

11FEB2022Rev2